REV	CHANGE	DATE
B	IMAGE ENHANCEMENT	11/16/15

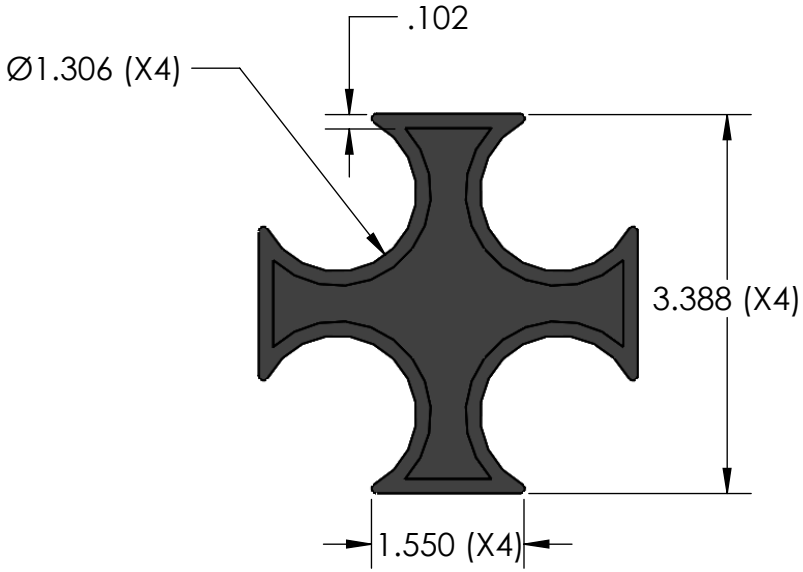

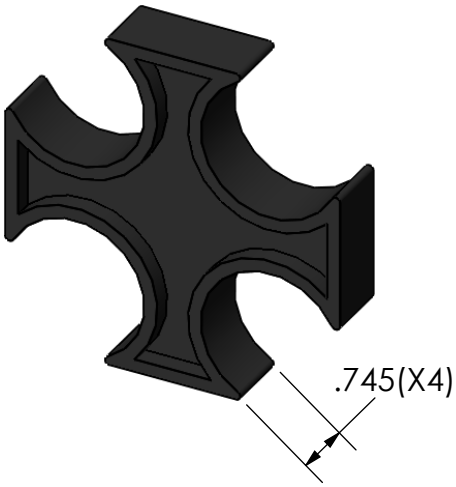

PROPRIETARY AND CONFIDENTIAL

THE INFORMATION CONTAINED IN THIS DRAWING IS THE SOLE PROPERTY OF CALAM MFG. ANY REPRODUCTION IN PART OR AS A WHOLE WITHOUT THE WRITTEN PERMISSION OF CALAM MFG. IS PROHIBITED.

NEXT ASSY	USED ON
APPLICATION	

UNLESS OTHERWISE SPECIFIED:

DIMENSIONS ARE IN INCHES
TOLERANCES:
FRACTIONAL: ±1/64
ANGULAR: 0.125°
TWO PLACE DECIMAL ±0.010
THREE PLACE DECIMAL ±0.005

INTERPRET GEOMETRIC TOLERANCING PER:

MATERIAL
ABS, BLACK

FINISH

DO NOT SCALE DRAWING

	NAME	DATE
DRAWN	HUIZAR	07/11/11
CHECKED	F.GRO	07/11/11
ENG APPR.		
MFG APPR.		
Q.A.		

COMMENTS:

CAL AM MANUFACTURING

TITLE:

4 WAY 1" CLIP SPACER

SIZE	DWG. NO.	REV
A	A4W-10	B

SCALE: WEIGHT: SHEET 1 OF 1

5 4 3 2 1